(12) INNOVATION PATENT
(19) AUSTRALIAN PATENT OFFICE

(11) Application No. **AU 2014101425 A4**

(54) Title
Extenda Brushes

(51) International Patent Classification(s)
A46B 17/02 (2006.01) ***B25G 3/00*** (2006.01)
A46B 5/00 (2006.01)

(21) Application No: **2014101425** (22) Date of Filing: **2014.12.02**

(30) Priority Data

(31) Number	(32) Date	(33) Country
618603	**2013.12.05**	**NZ**

(45) Publication Date: **2015.01.15**
(45) Publication Journal Date: **2015.01.15**
(45) Granted Journal Date: **2015.01.15**

(71) Applicant(s)
Jason Braybrook

(72) Inventor(s)
Braybrook, Jason Murray

(74) Agent / Attorney
Jason Murray Braybrook, 622 high st, preston, VIC, 3072

2014101425 02 Dec 2014

Abstract.

The purpose of these inventions is to allow the painter to effectively operate the use a paint brush at a distance but at speed and to have the brush securely attached to the pole so as to maximise the accuracy of how this product can be used. This will enhance the time spent performing painting tasks and greatly improve work safety and work comfort as the product is designed to reduce ladder and scaffold use and to keep the painter on the ground as much as possible without compromising accuracy of the workmanship.

2014101425 02 Dec 2014

Drawings

1/2

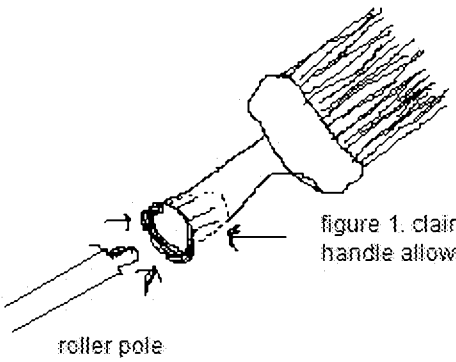

figure 1. claim 1. fitting inside brush handle allowing attchment to pole

roller pole inserted

2/2

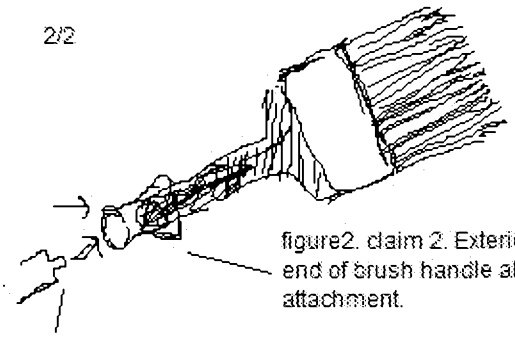

figure2. claim 2. Exterior sleeve on end of brush handle allowing attachment.

roller pole attached into exterior slip on end of brush

20141014425 02 Dec 2014

Description.

Extenda Paint Brush designs.

Paint brush accessory. (trade tool/other)

Extenda paint brush designs are an attempt to redefine paint brush design by allowing an attachment mechanism on the end of the brush handle thus allowing a standard roller pole to be securely attached directly to a paint brush.

The problem with current designs is that they are ineffective in that they require the painter to reach up and below their usual field of vision thus consuming a lot of time and compromising safety through the use of ladders and scaffolding

The solution that Extenda brushes proposes is that the roller pole can be secured directly into the handle of the brush via an attachment at the base of the handle securing it in place and allowing easy displacement of the brush from the roller pole whereby the painter can use the brush at close range at will and vice versa.

The advantages of this product range from: Increased work place safety due to reduced ladder and scaffold use; faster output as again it reduces the need to use ladders and scaffold; Better work place comfort as it reduces crouching and extending and doesn't compromise too much on ordinary brush control at close range.

2014101425 02 Dec 2014

Claims.

1. I hereby claim the right of invention over any paintbrush that has a hollow at the end of the brush handle now shortened in its usual length with a moulding plastic or otherwise which is fitted into the interior of the end of the brush handle acting as an interior slip thus allowing the roller pole to be screwed in and securely attached.

2. I hereby claim the right of invention over any paintbrush that has an exterior sleeve moulded or removable which can be sold on the brush handle or as a separate device that slips over the end of the brush handle and has an opening at the end thus allowing the roller or extender pole to be securely attached.

2014101425 02 Dec 2014

Drawings

1/2

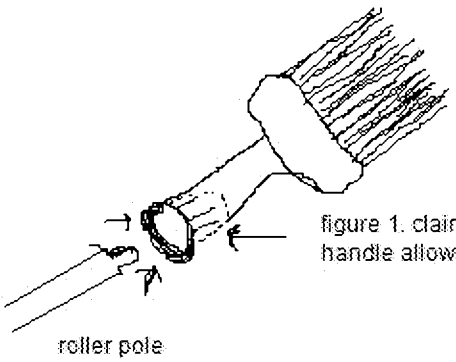

figure 1. claim 1. fitting inside brush handle allowing attchment to pole

roller pole inserted

2/2

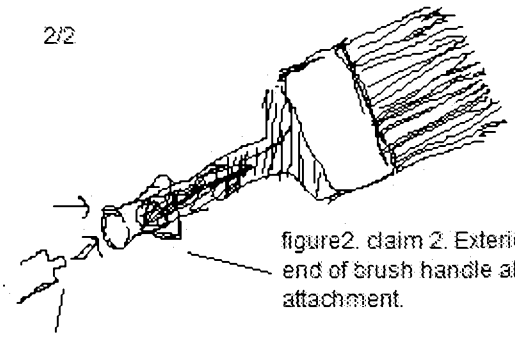

figure2. claim 2. Exterior sleeve on end of brush handle allowing attachment.

roller pole attached into exterior slip on end of brush